ECLSS

NODE 1 PRESS HIGH/LOW

BACKUP C/W ALARM

(F7)

S210 ISS C&W WARN

S210 NODE 1 CAB PRES

If Node 1 Press

< 13.9 or > 15.0 psia

EPCS C&W Sum

C/W Summary

Cabin Press Low - Node 1

If N1 Press
< 718 mmHg
(13.9 psia)

If Node 1 press
< 786 mmHg
(15.2 psia)

Nominal Config:
TBD

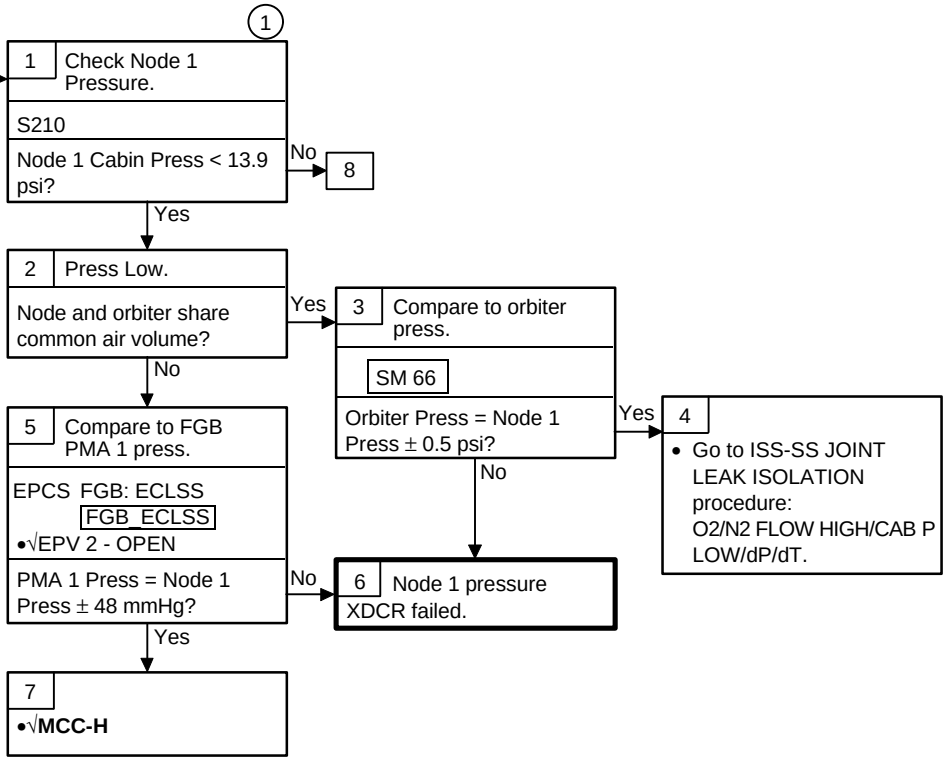

NODE 1 PRESS HIGH/LOW (cont)

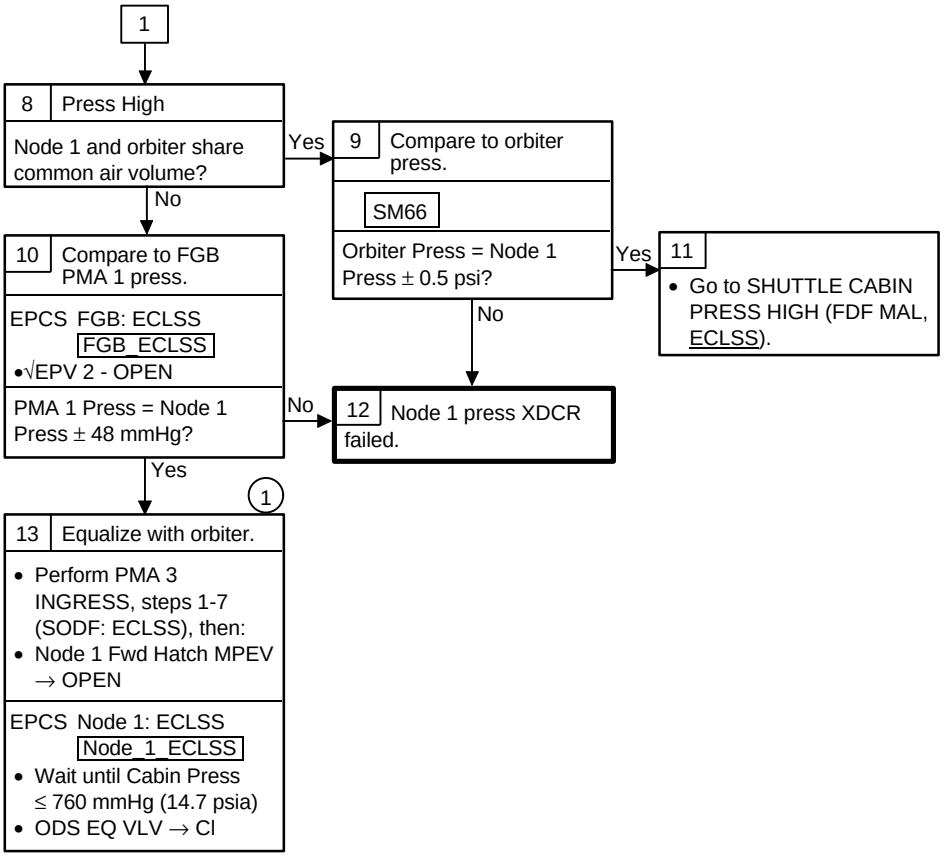

(1) Equalization of Node 1 with orbiter should be considered to preclude PPRV actuation.

Node 1 PPRVs crack at 765.2 mmHgd (14.8 psid) with full open at 780.7 mmHgd (15.1 psid).