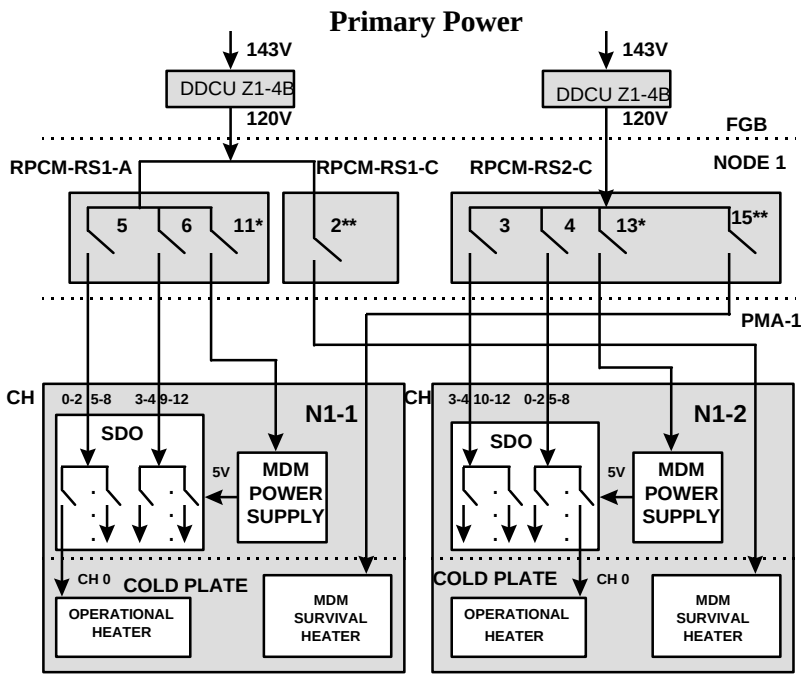

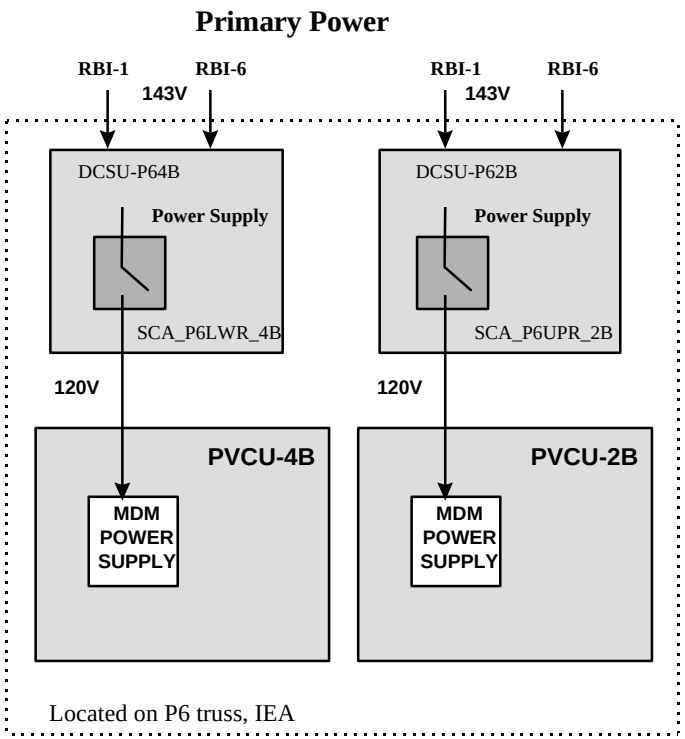

NOTE
- * RPCMs pre-set to close
- ** Activated when an MDM is powered off
- *** RACUs are used until 5A when they are disconnected and RPDA rail jumper is connected

Acronyms

SDO	Solenoid Driver Output
MDM	Multiplexer/Demultiplexer
N1	Node 1
PMA	Pressurized Mating Adapter
RPCM	Remote Power Controller Mechanism
DDCU	DC/DC Converter Unit
DCSU	DC Switching Unit
SCA	Switchgear Controller Assembly
PVCU	Photovoltaic Controller Unit
IEA	Integrated Electronics Assembly

4A POWER CONFIGURATION: POST 4A ACTIVATION