Z1 PRESSURE DOME EGRESS

TOOLS AND EQUIPMENT REQUIRED
Internal Sampling Adapter (ISA)
Pressure Module (PM)
Fluke 87 Multimeter
Vacuum Access Jumpers, VAJ (two) - 5 ft., 35 ft.
Torque wrench

Z1 PRESSURE DOME EGRESS

Node 1 Ovhd
1. Close Node 1 Overhead Hatch per decal.

2. √MPEV - Close

PRESSURE MODULE/ISA/VAJ/MPEV/PPRV SETUP

3. ISA Sample Port → Close

Node 1 Port
4. √PPRV Snout Isolation Valve - Close

5. Torque 35 ft VAJ to Port PPRV snout to 750-825 in-lbf.

6. Torque other end of 35 ft VAJ to ISA-VAJ port #2 to 750-825 in-lbf.

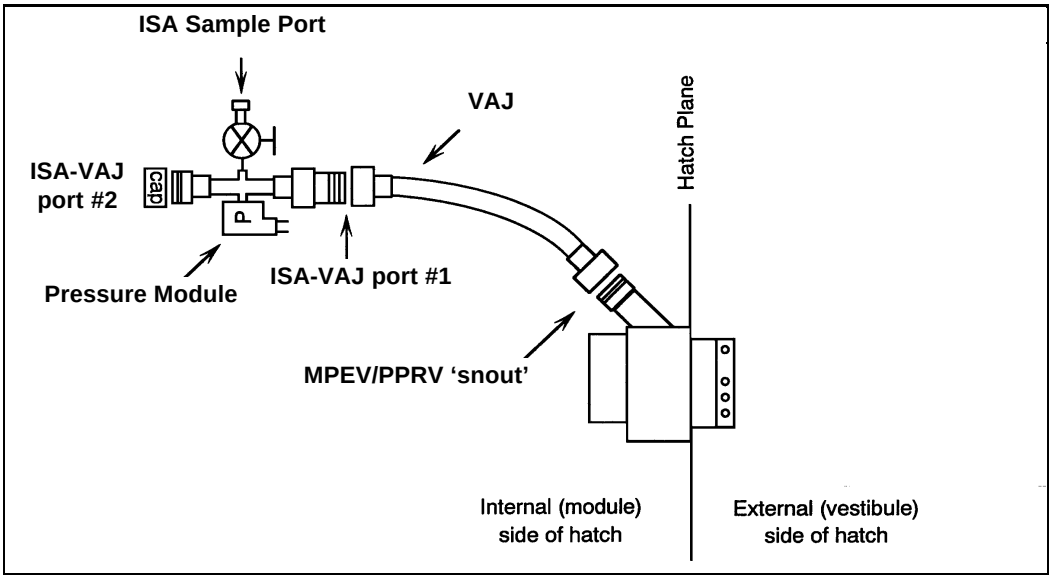

Figure 1.- Title.

MULTIMETER/PRESSURE MODULE SETUP

Node 1 Ovhd
7. √Pressure Module - Off

8. √Multimeter - Off

9. Pressure Module → mmHgA

10. Depress yellow button for 2 seconds while selecting V.

Z1 PRESSURE DOME DEPRESS

WARNING
1. Opening the PPRV/MPEV will start the depress.
2. The VAJ may whip if untethered.
3. The PPRV/MPEV should be opened slowly.

Node 1 Port 11. PPRV Snout Isolation Valve → Open

Node 1 Ovhd 12. MPEV → Open

13. When multimeter reading < 0.001 V (~2 minutes)
Node 1 Port PPRV Snout Isolation Valve → Close

14. √Multimeter reading not ↑

NODE 1 OVERHEAD HATCH FINE LEAK CHECK

Node 1 Ovhd 15. Record multimeter reading: P_1 = _____ V

16. MPEV → Close

17. Wait 30 minutes.
Node 1 Port PPRV Snout Isolation Valve → Open

18. Wait 30 seconds.
PPRV Snout Isolation Valve → Close

19. MPEV → Open

20. Record multimeter reading: P_2 = _____ V
dP = P_2 - P_1 = _____ V
If dP > 0.0002 V, hatch leak check failed, >>

√**MCC-H**

DISMANTLE AND STOW EQUIPMENT

Node 1 Ovhd 21. MPEV → Close

22. Multimeter → Off

23. Pressure Module → Off

24. Disconnect and stow Multimeter.

25. Disconnect VAJs and stow in TBD location.

26. Cap ISA and stow in TBD location.

CAP MPEV AND PPRV

Node 1 Port	27. Hand tighten PPRV cap.
Node 1 Ovhd	28. Hand tighten MPEV cap.