CBM CONTROLLER ASSY R&R NODE 1

OBJECTIVE:
This procedure removes and replaces a failed Node 1 CBM Controller Assembly.

LOCATION:
Installed: Active CBM docking ring
Stowed: √ Maint Dbase

DURATION:
26 minutes

PARTS:
CBM Controller Assembly (P/N 2355260-1)

MATERIALS:
None

TOOLS REQD:
Equipment Bag
Tether
Scopemeter
  Kit E:
Ratchet 3/8” Drive
4" Ext 3/8" Drive
  Kit C:
7/16” Socket, 3/8” Drive
  Kit D:
5/32" Hex Head, 3/8" Drive
  Kit G:
(30-200 in-lbs)Trq Wrench, 3/8” Drive
  IVA Tool Box, Lid #1
Static Wrist Tether

REFERENCED PROC:
CBM CONTROLLER ACTIVATION & CHECKOUT

SAFE

WARNING

Failure to remove power can result in electrical shock hazard.

Table 1. Node 1 CBM Controller Power Distribution

Cntr Assy	Pri Pwr RPC	Sec Pwr RPC
FORWARD	--------	--------
Cntr Asy 1	RPCM_N13B_C_RPC_03	RPCM_N14B_A_RPC_02
Cntr Asy 2	RPCM_N13B_C_RPC_04	RPCM_N14B_A_RPC_03
Cntr Asy 3	RPCM_N13B_C_RPC_05	RPCM_N14B_A_RPC_14
Cntr Asy 4	RPCM_N13B_C_RPC_06	RPCM_N14B_A_RPC_15
ZENITH	--------	--------
Cntr Asy 1	RPCM_N13B_B_RPC_11	RPCM_N14B_B_RPC_03
Cntr Asy 2	RPCM_N13B_B_RPC_12	RPCM_N14B_B_RPC_04
Cntr Asy 3	RPCM_N13B_B_RPC_13	RPCM_N14B_B_RPC_05
Cntr Asy 4	RPCM_N13B_B_RPC_14	RPCM_N14B_B_RPC_06
NADIR	--------	--------
Cntr Asy 1	RPCM_N13B_B_RPC_03	RPCM_N14B_B_RPC_11
Cntr Asy 2	RPCM_N13B_B_RPC_04	RPCM_N14B_B_RPC_12
Cntr Asy 3	RPCM_N13B_B_RPC_05	RPCM_N14B_B_RPC_13
Cntr Asy 4	RPCM_N13B_B_RPC_06	RPCM_N14B_B_RPC_14
PORT	--------	--------
Cntr Asy 1	RPCM_N1RS2_C_RPC_07	RPCM_N1RS1_B_RPC_05
Cntr Asy 2	RPCM_N1RS2_C_RPC_08	RPCM_N1RS1_B_RPC_06
Cntr Asy 3	RPCM_N1RS2_C_RPC_10	RPCM_N1RS1_B_RPC_13
Cntr Asy 4	RPCM_N1RS2_C_RPC_11	RPCM_N1RS1_B_RPC_14
STARBOARD	--------	--------
Cntr Asy 1	RPCM_N1RS2_A_RPC_05	RPCM_N1RS1_C_RPC_05
Cntr Asy 2	RPCM_N1RS2_A_RPC_06	RPCM_N1RS1_C_RPC_06
Cntr Asy 3	RPCM_N1RS2_A_RPC_10	RPCM_N1RS1_C_RPC_12
Cntr Asy 4	RPCM_N1RS2_A_RPC_11	RPCM_N1RS1_C_RPC_13

1. Verify Primary, Secondary RPCs supplying applicable CBM are Op.

PCS S&M

N1 [X] CBM Display [X] = Fwd, Zenith, Nadir, Port, Starboard

'Controller Panel Assy Power/Data Status'

√ Pri Pwr RPC Contr Assy [Y] = Op [Y] = 1 2 3 4

(See Table 1.).

√ Sec Pwr RPC Contr Assy [Y] = Op [Y] = 1 2 3 4
(See Table 1.).

CAUTION
Equipment contains parts sensitive to damage by Electrostatic Discharge (ESD)

2. Don static wrist tether. Secure clip end to unpainted metal surface.

REMOVE See Figure 1.

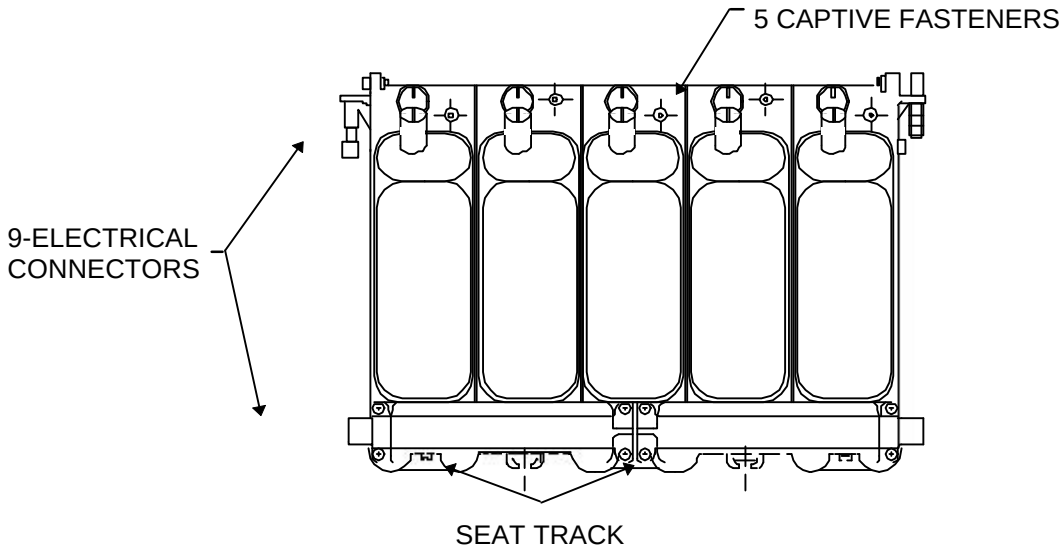

Figure 1. CBM Controller Panel Assembly

3. Label power/data cables with corresponding J receptacle numbers.

4. Demate power/data cable connectors (nine) from Controller Assembly (Tmpry restrain).

5. Disconnect ground straps (two) from Controller Assembly (Ratchet 3/8" Drive, 4 " Ext, 5/32" Hex Head).

6. Loosen fasteners (five), detach from bulkhead (Ratchet 3/8" Drive, 7/16" socket). (label, Tmpry stow).

REPLACE

7. Tighten fasteners (five), torque to 100 +/- 5 inch pounds (Ratchet 3/8" Drive, 7/16" Socket, (30-200 in-lbs)Trq Wrench).

8. Connect Controller Assembly ground straps (two) (Ratchet 3/8” Drive, 4" Ext, 5/32” Hex Head).

9. Check for continuity between casing of each Controller Assembly module (seven) and Node 1 structure (Scopemeter).

Table 2. CBM Controller Power/Data Cables

Cable	Plug No.	Receptacle No.	Harness No.
Capture Latch	P1	J5	
Powered Bolt	P1	J6	
Powered Bolt	P1	J7	
Powered Bolt	P1	J8	
Powered Bolt	P1	J9	
Primary Power	P2	J1	
Secondary Power	P1	J3	
1553 Bus Data	P2	J2	
485 Bus Data	P1	J4	

10. Mate all CBM controller power/data cables (nine). See Table 1.

CHECK-OUT

11. Perform *CBM controller activation and checkout procedure for applicable controller.*

POST MAINTENANCE

12. Stow failed controller assembly, tools, equipment.

13. Update Maint. Dbase.