OCA SETUP

1. UNSTOW

MF43H — SSC/OCA Docking Station
NOD1D4_D2 — OCA cables
Pwr cables
Headset
Mini-cam
Speakers

SSC — 2. √Expansion Chassis pwr - Off

NOD1S4_XX — 3. INHIBIT POWER TO OCA

If in FGB
TBD.

If in Node 1
Configure switch on RF PWR DIST BOX ORU PGSC/RF → Off

4. PLUG PWR

If in FGB
Config cables per ECOMM FGB VTS POWER ARRANGEMENT.

If in Node 1
Config cables per ECOMM NODE VTS POWER ARRANGEMENT.

5. √SSC Expansion Chassis airflow ports not obstructed

6. CONFIG DATA CABLES

If in FGB
Config cables per ECOMM FGB VTS DATA ARRANGEMENT.

If in Node 1
Config cables per ECOMM NODE VTS DATA ARRANGEMENT.

If VIDEO TELECON
Config cables per P/TV25 EARLY COMM VIDEO TELECONFERENCE, P/TV FS 1-78.

NOD1S4_XX — 7. ENABLE POWER TO OCA

If in FGB
TBD.

If in Node 1
Configure switch on RF PWR DIST BOX ORU PGSC/RF → On

SSC — Expansion Chassis pwr → On
SSC pwr → On

8. At Startup Menu, sel “Docked” config

> NOTE
> KFX software will be initiated upon bootup for SSCs with OCA card installed.

√‘KFX’ icon Mini-Window appears
√TDRSS LINK STATUS display appears, then:
√OCA-ORBITER SEND: 128 Kpbs

```
*******************************************************
*  If SEND rate out of config                         *
*       sel OPTIONS                                   *
*       sel DOWNLINK RATE 128 Kbps, as reqd *
*******************************************************
```

9. Notify **MCC** when complete.

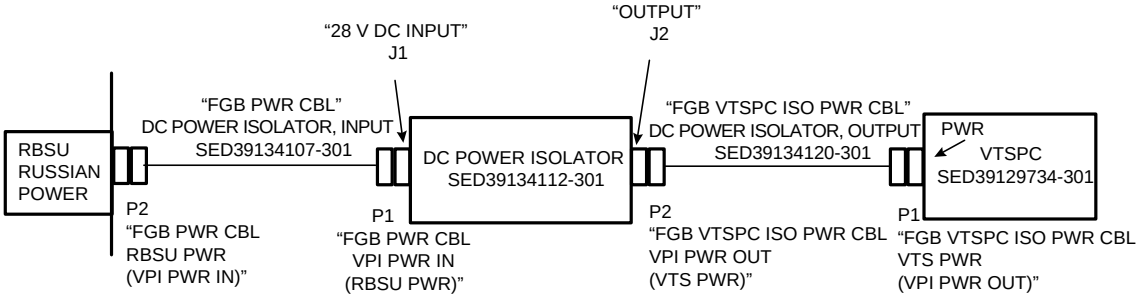

Figure 1.- ECOMM FGB VTS Power Arrangement.

> NOTE
> Items in quotation marks are crew label messages. Labels follow standard format, top line is cbl name, next line is what the connector attaches to, remaining lines are what the remaining connectors attach to.

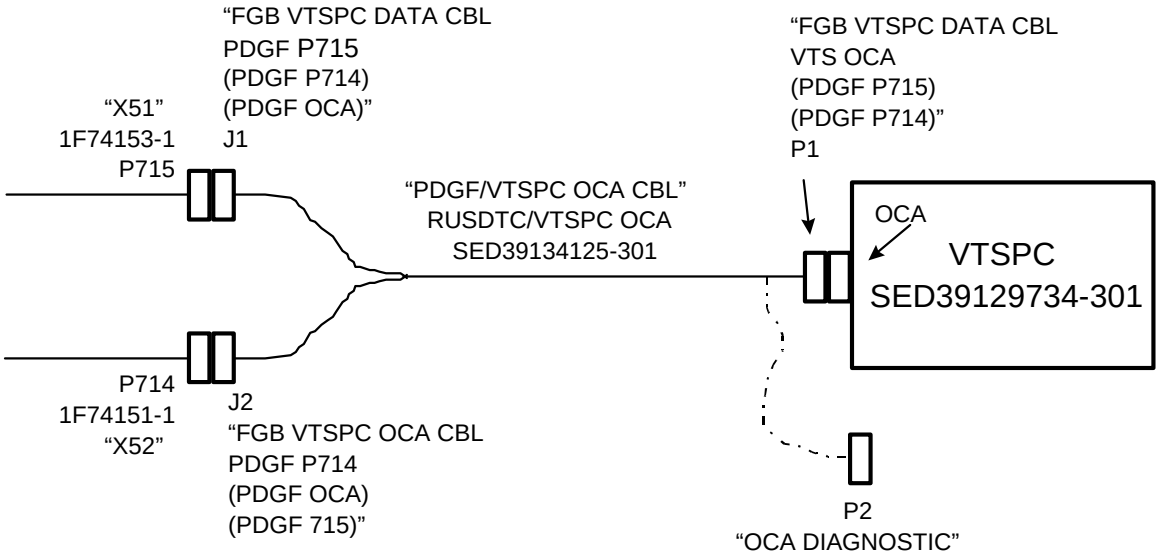

Figure 2.- ECOMM FGB VTS Data.

NOTE

Items in quotation marks are crew label messages. Labels follow standard format, top line is cbl name, next line is what the connector attaches to, remaining lines are what the remaining connectors attach to.

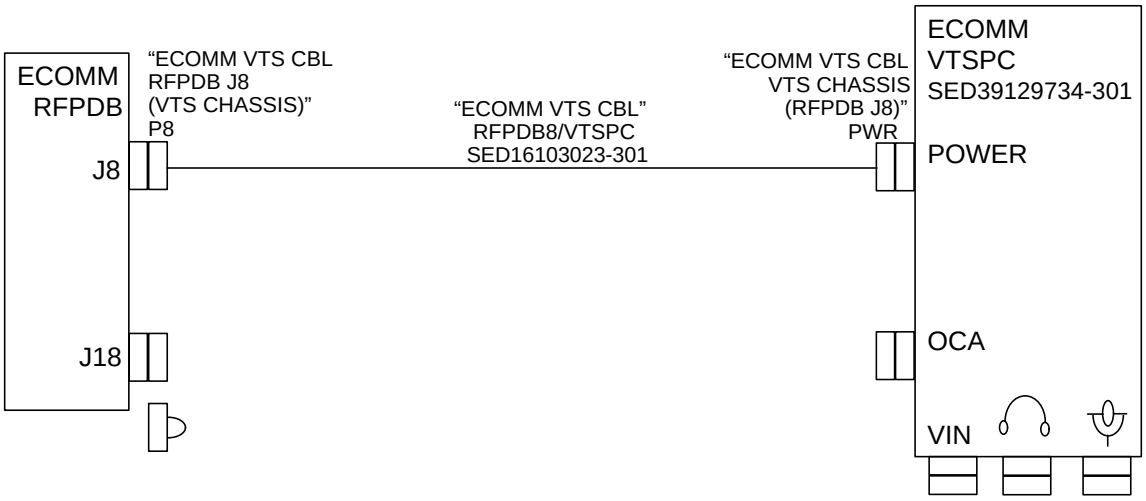

Figure 3.- ECOMM NODE VTS Power Arrangement.

NOTE

Items in quotation marks are crew label messages. Labels follow standard format, top line is cbl name, next line is what the connector attaches to, remaining lines are what the remaining connectors attach to.

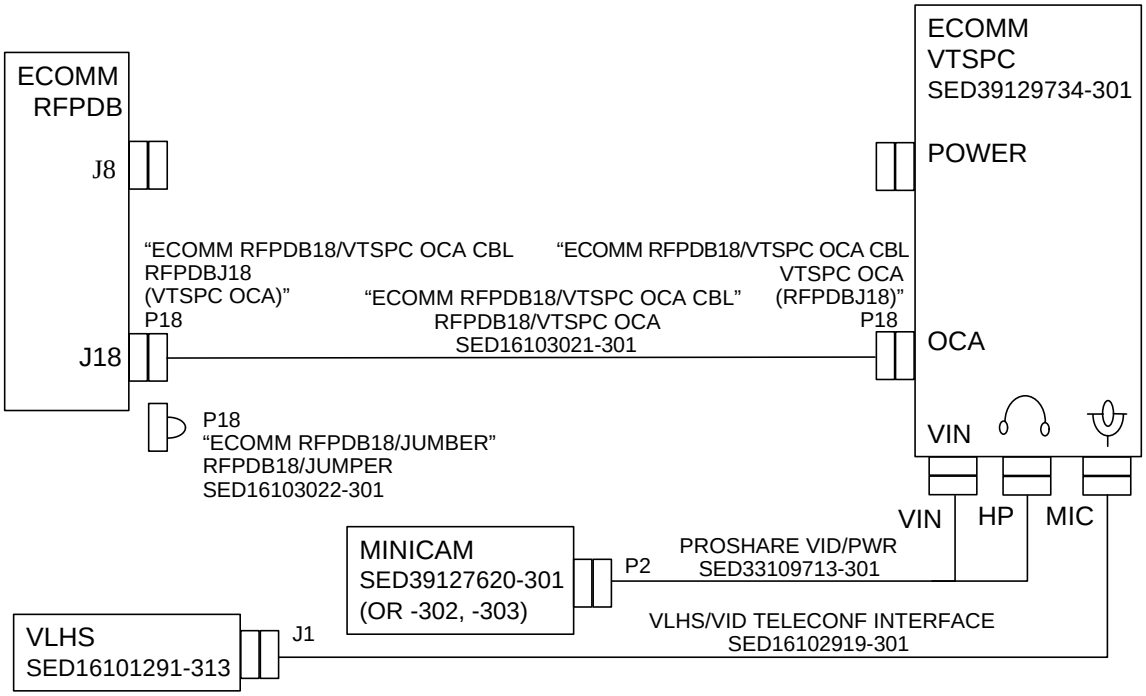

Figure 4.- ECOMM NODE VTS Data Arrangement.